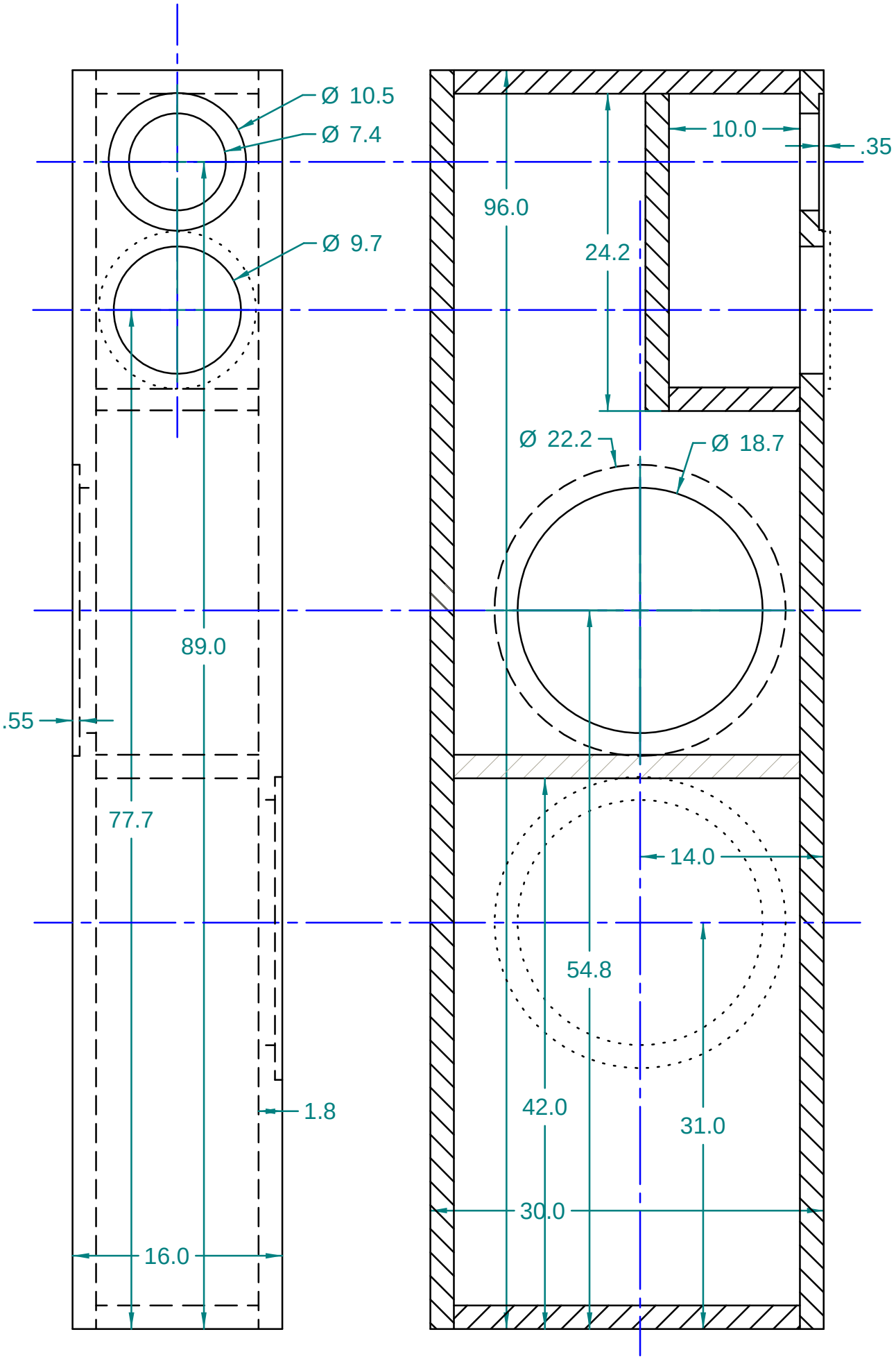
Ø 10.5
Ø 7.4
Ø 9.7
89.0
.55
77.7
1.8
16.0
96.0
10.0
.35
24.2
Ø 22.2
Ø 18.7
14.0
54.8
42.0
31.0
30.0