V(vS)/V(vF)

V(test)/I(V5)

Ton = {0.5/<value in Hz>}
Tperiod = {1/<value in Hz>}

.four 1k V(+Out1)

.options plotwinsize=0
.option noopiter

.tran 0 5m 0 22n
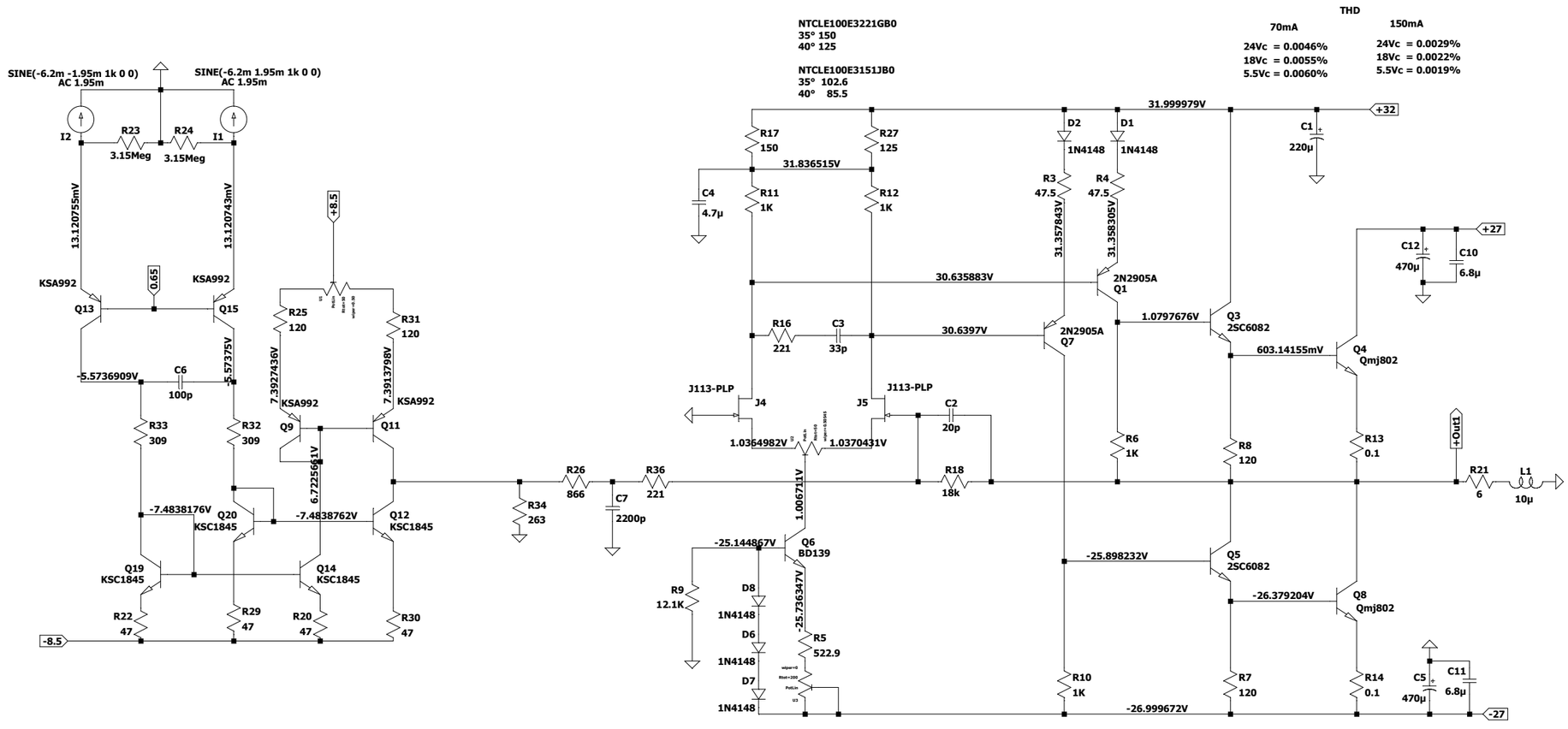
;ac dec 101 0.1 100meg