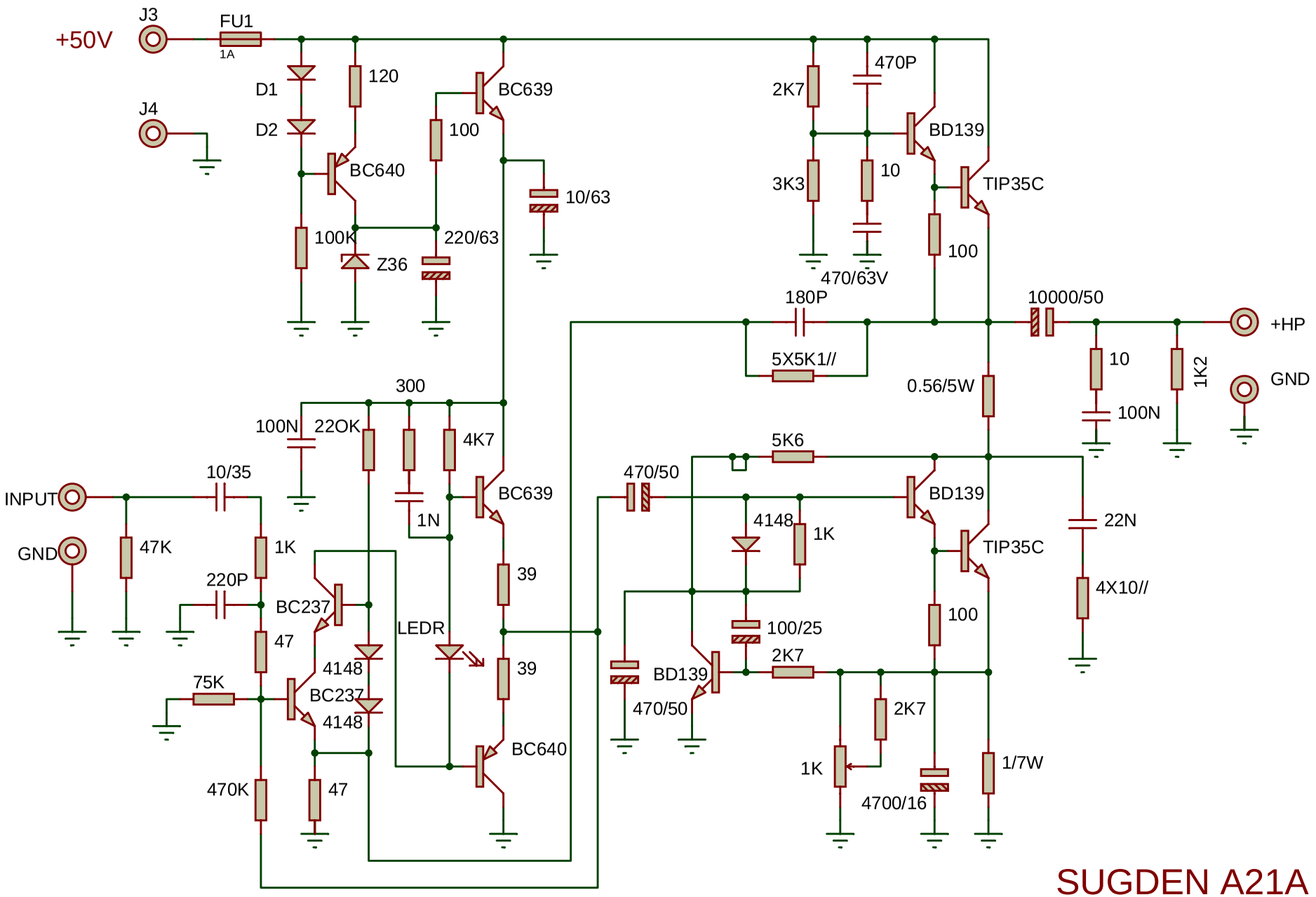
+50V
J3
FU1
1A
J4
D1
D2
120
BC640
100K
Z36
100
BC639
220/63
10/63
2K7
470P
BD139
3K3
10
TIP35C
470/63V
100
180P
10000/50
+HP
5X5K1//
0.56/5W
10
1K2
GND
100N
300
100N
22OK
4K7
5K6
470/50
INPUT
10/35
BC639
1N
BD139
4148
1K
22N
GND
47K
1K
TIP35C
39
4X10//
220P
BC237
LEDR
100
47
100/25
4148
39
2K7
75K
BC237
BD139
4148
470/50
2K7
BC640
1K
1/7W
470K
47
4700/16

SUGDEN A21A