A Three-Enclosure Loudspeaker System: Part 3

Changes and refinements to the system described in Parts I and II

by SIEGFRIED LINKWITZ

orig.: Wireless World
Vol. 84,
December 1978

THESE NOTES are intended to encourage further development of loudspeakers, and bring increased enjoyment to those who want to undertake the task of building their own systems. The changes and refinements made to the original loudspeaker system, described in issues 2 and 3, are presented to show the completeness of the analytical design approach, and should not be taken as an indication that the previous system is obsolete. The audible effects of the changes are subtle and the added complexity of the circuits would be worthwhile only to someone trying to achieve greatest accuracy of reproduction. But the techniques described should be of general interest to any loudspeaker designer.

I believe the weakest link in recreating the illusion of a life source with loudspeakers lies at the microphone pick-up end of the signal chain. It seems likely that more than two loudspeakers are needed, but first a much better understanding for recording and reproducing the appropriate sound field has to be developed and demonstrated. Then it may be possible to transport oneself to Symphony Hall without moving out of the living room chair. Meanwhile the loudspeaker as the necessary electroacoustic transducer can approach a high state of development.

DRIVER/FILTER MATCH

Any moving coil driver has the general frequency response of *Fig.* 22 (*Fig.* 17, ref. 6. Figure numbers prior to 22 refer to the author's previous articles, Issues 2 & 3, 1980) when driven from a constant voltage source. This is a second-order filter with an asymptotic slope of 12dB/octave below the resonant frequency f_o and flat sound pressure output above it. The height of the peak near f_o and Q_o are easily determined from an impedance measurement of the driver, *Fig. 18*. This general transfer function between terminal voltage and sound pressure output applies to woofers, mid-range units and tweeters as long as their cone dimensions are small acoustically, *Fig.* 2, and must be taken into account when designing a crossover network.

As an example, consider the high-pass section of a crossover to a 25mm dome tweeter which has a resonance of 800Hz with Q_o of 0.9, *Fig. 23(a)*. The desired acoustic output should follow the fourth-order high-pass characteristic of the 24dB/octave crossover with 1.5kHz as the −6dB crossover frequency (b). At first glance it seems sufficient to shape the driver terminal voltage to follow the 24dB/octave high-pass function of (b) because the filter has 22dB of attenuation at the driver resonance. Indeed, this was the procedure in the original crossover design for the T27 tweeter, *Fig. 10*. Such terminal voltage, however, causes a 36dB/octave roll-off in acoustic output from the driver for frequencies below resonance f_o.

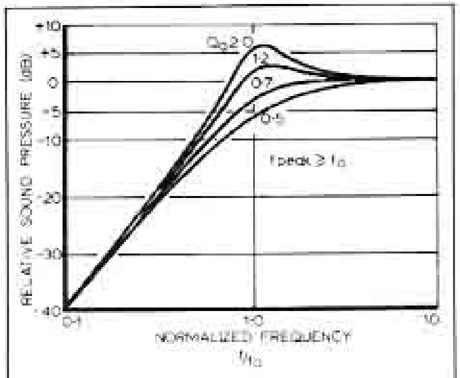

Fig. 22. Frequency response of a moving-coil driver with dimensions small compared to a wavelength, which must be taken into account when designing crossover networks.

To achieve the exact acoustic frequency response of (b) the terminal

Continued on page 16

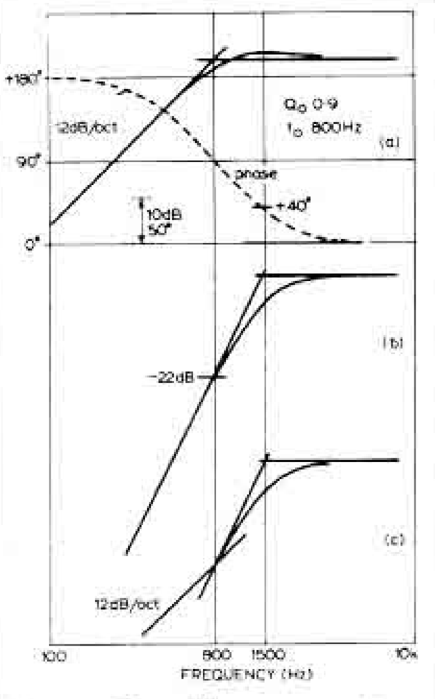

Fig. 23. To achieve an acoustic or overall high-pass filter response with 24dB/octave slope (b), requires the terminal voltage to follow a 12dB/octave slope below resonance to compensate for the effects of the driver, whose sound pressure and phase response are shown at (a).

Revised from articles first published in *Wireless World*, London.

A THREE-ENCLOSURE LOUDSPEAKER SYSTEM

continued from page 14

voltage must follow a 12dB/octave slope below the 800Hz driver resonance (c). This then compensates exactly for the phase shift and group delay which the driver would otherwise add to the acoustic high-pass function. The additional phase shift would cause a tilting of the radiation pattern as the sound pressures from the tweeter and mid-range unit would add to a maximum at a point off-axis.[10] The amount of the phase shift introduced by a second-order high-pass filter can be calculated for $Q_o \geq 0.5$ from

$$\phi = 180^0 - \arctan\left[2Q_0\frac{f}{f_0} + \sqrt{(2Q_0)^2-1}\right] \ldots$$

$$-\arctan\left[2Q_0\frac{f}{f_0} - \sqrt{(2Q_0)^2-1}\right]$$

For the above example, the driver contributes 40° of phase shift at 1.5kHz. Sound pressures from the mid-range unit and tweeter are therefore not in phase unless the measures described are taken.

DRIVER TERMINAL VOLTAGE

The acoustic high-pass function of the previous example requires an exactly-shaped terminal voltage to compensate for the driver's own frequency response. A fourth-order high-pass response is equivalent to the cascade of two second-order Butterworth sections.[10] The first step then is to equalize the driver output to follow a second-order Butterworth function by shaping the terminal voltage applied to it, *Fig. 24*. Design formulas were developed for a very useful network, *Fig. 25*. It is a modification of *Fig. 20* and will later be used also to extend the woofer response.

A note to those familiar with the description of transfer functions by poles and zeroes in the complex frequency plane: This network will generate a pair of complex zeroes (f_o, Q_o) which are positioned to cancel the complex poles of the driver (f_o, Q_o). In addition, a pair of complex poles (f_p, Q_p) is available which are placed at the crossover frequency in the case of the tweeter highpass or at the lower cut-off point of the woofer in the case of woofer equalization. The factor K in the design formulas is necessary for cancelling a pole-zero pair (f_{p1}, f_{z1}) which would otherwise be introduced by the network.

The second step in designing the acoustic high-pass filter is to follow this network with a standard second-order Butterworth section to achieve the overall drive voltage of *Fig. 23(c)*. The complete circuit of *Fig. 26* is only slightly more elaborate than *Fig. 14* but it achieves the exact fourth-order acoustic output, *Fig. 23(b)*.

Continued on page 18

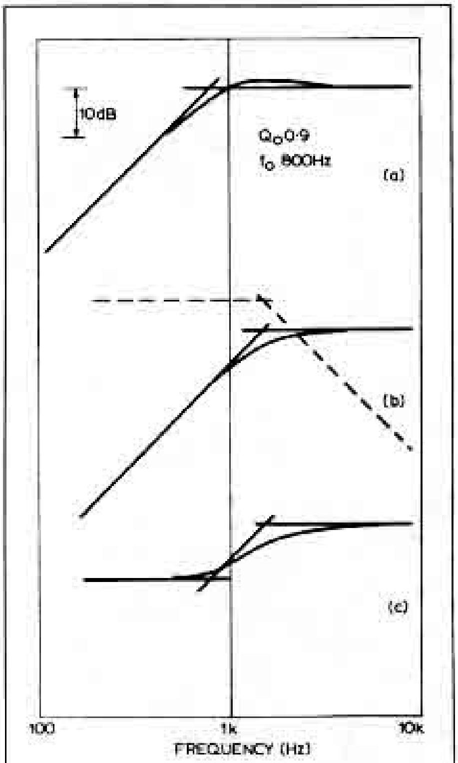

Fig. 24. Required drive voltage (c) has to be constant below the driver resonance frequency f_o to give the desired acoustic h. p. response (b) (cone excursion shown dashed), as a result of driver response (a).

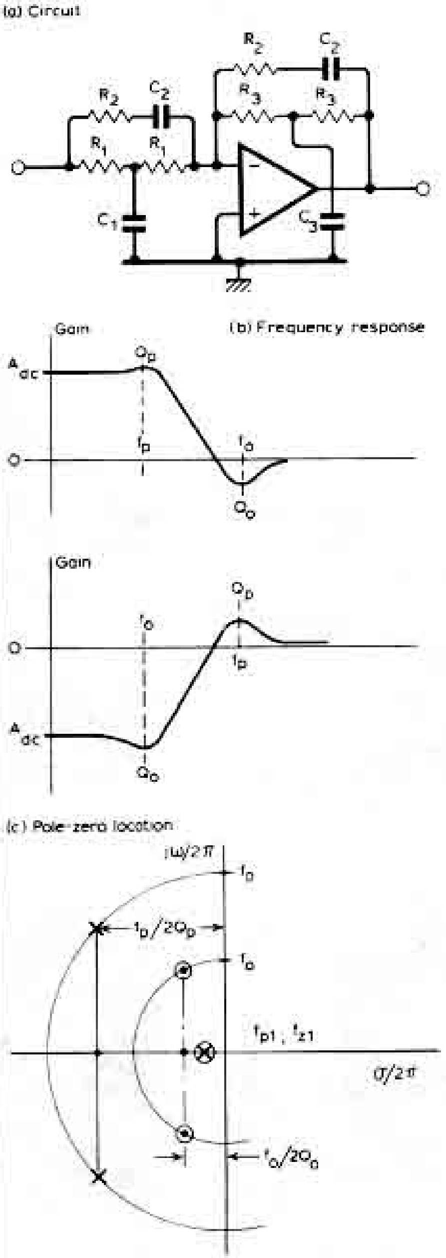

(d) Design formulas

(1) Specify f_0, Q_0, f_p, Q_p

(2) $k = \dfrac{\dfrac{f_0}{f_p} - \dfrac{Q_0}{Q_p}}{\dfrac{Q_0}{Q_p} - \dfrac{f_p}{f_0}}$ k > o required

(3) Choose C_2 (4) $R_1 = \dfrac{1}{2\pi f_0 C_2 [2Q_0(1+k)]}$

(5) $R_2 = 2kR_1$ (6) $C_1 = C_2 [2Q_0(1+k)]^2$

(7) $C_3 = C_1\left(\dfrac{f_p}{f_0}\right)^2$ (8) $R_3 = R_1\left(\dfrac{f_0}{f_p}\right)^2$

(9) $A_{dc} = 40\log\dfrac{f_0}{f_p}$ [dB]

(e) Circuit analysis

$$\left.\begin{aligned} f_{p1} &= \frac{1}{\pi C_1 R_1} \\ f_{z1} &= \frac{1}{\pi C_3 R_3} \end{aligned}\right\} f_{p1} \approx f_{z1} \text{ required}$$

$$f_0 = \frac{1}{2\pi R_1\sqrt{C_1 C_2}} \qquad Q_0 = \frac{R_1}{2R_1 + R_2}\sqrt{\frac{C_1}{C_2}}$$

$$f_p = \frac{1}{2\pi R_3\sqrt{C_2 C_3}} \qquad Q_p = \frac{R_3}{2R_3 + R_2}\sqrt{\frac{C_3}{C_2}}$$

Fig. 25. Useful network for compensating driver resonance at f_o and extending frequency response to f_p for woofer equalization or providing cut-off at f_p for mid-range or tweeters high-pass, responses. Calculated values should be checked with the circuit analysis equations.

A THREE-ENCLOSURE LOUDSPEAKER SYSTEM

continued from page 16

CROSSOVER FREQUENCIES AND DRIVERS

The technique described could be used to modify the original T27 high-pass filter (f_o 1.2kHz, Q_o 1.1). Instead, I used a Son-Audax HD12.9 D25 soft-dome tweeter with a 1.5kHz crossover frequency to the B110. I used HD12.9D25 with non-replaceable voice coil, ~~is used~~ instead of the HD12.9D25A because of flatter frequency response. It is available from Transcendental Audio, Arvada, Co. At 3kHz, the previous crossover point, the B110 cone diameter is about one wavelength so that a certain amount of directionality can be expected, *Fig. 1*. Further, the mid-range and tweeter units are separated by one wavelength at 3kHz so that the combined radiation pattern begins to narrow in the crossover frequency range *Fig. 3(b)*. The lower crossover reduces the acoustical dimensions by a factor of two so that a wider and more uniform dispersion is obtained over all frequencies in both the vertical and horizontal planes of radiation, *Fig. 2*. The loudspeaker then approaches more closely the acoustical point source.

While the mid-range unit has to cover one octave less in frequency, the tweeter must now have four times the excursion capability to maintain the same acoustic output. The Son-Audax unit works well in this application and there is no sacrifice in overall smoothness of response compared to the T27. The new unit does not slope down towards the high end. For most commercial recordings a slight droop of about 3dB between 2k and 15kHz seems subjectively preferable and such response can be easily adjusted with properly designed treble controls.

The crossover point between woofer and mid-range units has been raised from 70 to 100Hz, thus reducing the maximum cone excursion for the B110 by a factor of two for constant sound output. Experience has shown that only the mid-range power amplifier is occasionally driven into clipping. If carefully fused, a 100W amplifier might be considered for driving each B110. The three-way system is very forgiving to clipping of the mid-range amplifier. It is not audible on short transients because the woofer and tweeter channels still reproduce their undistorted portion of the total signal. The reduced frequency coverage of the B110 at both low and high frequencies improves the amplifier power distribution between the drivers.

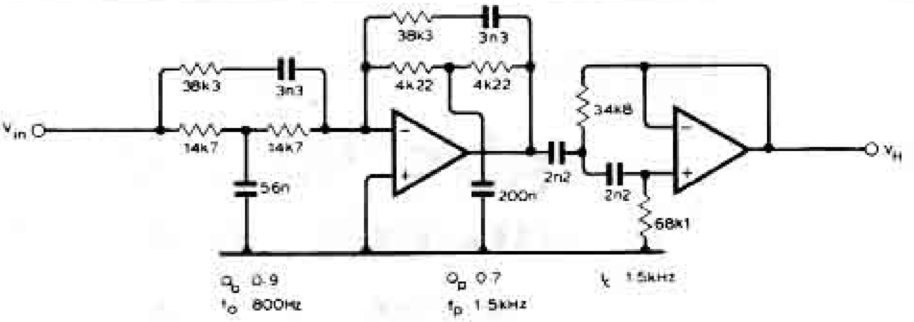

Fig. 26. Network for a 1.5kHz 24dB/octave acoustic highpass filter for a Son-Audax HD12.9D25 dome tweeter. The first op-amp stage compensates exactly for the driver resonance at 800Hz and gives a 12dB/octave 1.5kHz acoustic high-pass response. The second op-amp stage is a conventional Butterworth section. Design formulas for this network are from Fig. 25 and Fig. 14.

The crossover frequency between woofer and mid-range units was not raised further because the center woofer is positioned 0.84m behind the mid-range unit and the phase shift

$$\Phi = 360° \frac{d}{\lambda}$$

due to this path length would become excessive. Further, the stereo effect might suffer from the blending of left and right-channel information for too high a crossover frequency.

In the future it could become necessary to have truly full range, separate speakers for reproducing an appropriately recorded sound field. Previously the mid-range resonance at 70Hz was used as one section of the 24dB/octave acoustic high-pass function. The second section was provided by an active network. Now, both sections are implemented electronically using the circuit of *Fig. 25* to compensate for the B110's resonance in its enclosure, with f_o and Q_o determined from *Fig. 18* (f_o 73Hz, Q_o 0.6). The complete network has therefore a configuration similar to that of the tweeter, *Fig. 26*.

WOOFER EQUALIZATION

The center channel woofer covers a relatively narrow frequency range. Of particular interest is the lower cut-off point and cut-off rate. There is some indication that the low-end phase behavior of a system can have audible effects. A 5Hz square wave for example, which sounds like a sequence of clicks, will change its tonal character when transmitted through an all-pass network.[10] From network theory we know that any high-pass filter with a slope of more than 6dB/octave will

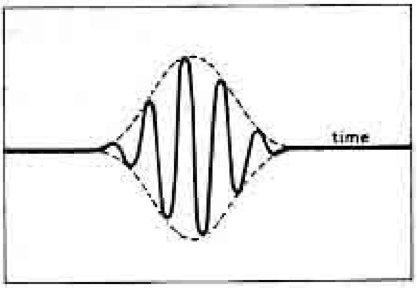

Fig. 27. Shaped toneburst used to evaluate the audibility of phase distortion.

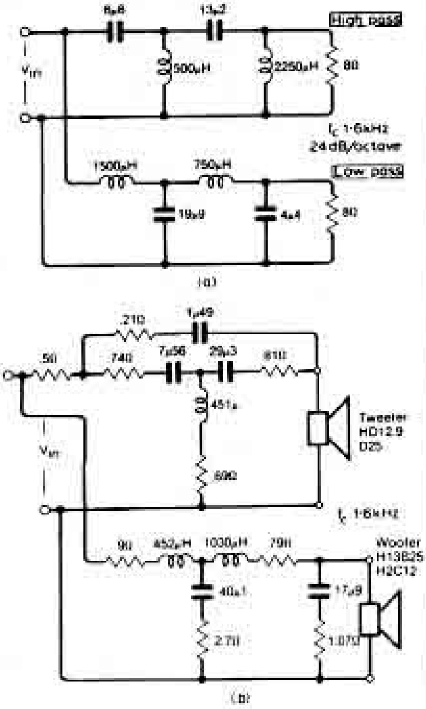

HD13

Fig. 28. Passive network for 24dB/octave acoustic slopes and 1.6kHz crossover frequency. If constant terminal impedance is assumed for the drivers then the network and its element values can be determined analytically[20] (a). Computer optimized network for actual drivers shown at (b).

produce some amount of ringing to a step input.[17] It is impractical to roll off the woofer at a 6dB/octave rate because it would mean that its cone excursion has to continue to increase at 6dB/octave even below the 3dB corner. The only practical way is to use a 12dB/octave rate. If the Q of this high-pass network is kept low at 0.5 then a minimum of overshoot is combined with a minimum of cone excursion.

The original network *Fig. 13* is a good approximation. The revised crossover uses the circuit of *Fig. 25* with f_p 19.3Hz and Q_p 0.5 which gives a 30Hz, 3dB corner frequency.

The high-pass nature of the woofer channel introduces phase shift at the 100Hz crossover to the mid-range unit according to the previous formula for Q_p 0.5:

$$\Phi = 180^\circ - 2\arctan \frac{f}{f_p} = 22^\circ$$

This amount of the phase shift by itself is insignificant, but combined with the phase shift due to the woofer location of 0.84m behind the mid-range it becomes necessary to add delay to the mid-range channel. It is implemented with the network of *Fig. 16* which has a phase shift of:

$$\Phi = -2\arctan (2\pi f RC)$$

Both the absolute value of the phase shift and the slope of the phase curve, or the group delay, can be made to coincide between woofer and mid-range channel. The specific network component values R and C depend upon the set-up of the loudspeaker system and no compensation is needed when mid-range and woofer radiate from the same plane. The two phase correcting stages have negligible effect at the 1.5kHz crossover.

AUDIBILITY OF CROSSOVER NETWORKS

Lowering of the tweeter crossover to 1.5kHz raised some concern over the audibility and phase distortion. The combined mid-range and tweeter sound pressure has an all-pass characteristic. Sound pressures from the two drivers are in phase at all frequencies relative to each other but the overall sound pressure has a frequency-dependent phase shift relative to the electrical signal at the input to the crossover network. The group delay is not constant with frequency.[10] Figure 11.

A new form of test signal was used which consists of a five-cycle tone

Continued on page 22

THREE-ENCLOSURE LOUDSPEAKER DESIGN

Continued from page 19

burst of variable frequency. The tone burst is not turned on and off in the usual abrupt fashion but instead it builds up and decays gradually, *Fig. 27*. The envelope of the burst follows a raised cosine function.[18] This signal is ideally suited to measure the psychoacoustically important blend of frequency and time response of loudspeakers. The spectral content of the shaped tone burst is concentrated in a narrow frequency range. The ear appears to be very sensitive to phase distortion of this signal, while a square wave or rectangular envelope burst are almost useless at higher frequencies for such tests.

A system with 24dB/octave crossover filters has the phase shift of a second-order all-pass network with complex poles and zeroes of Q = 0.7. No audible change could be noticed on insertion of this network into the test signal path. The Q had to be increased to 2.4 before any effect was noticed with the test signal at 1.5kHz. Observation with an oscilloscope indicated ringing of the trailing edge of the shaped burst which became increasingly more audible as Q was raised above 2.4. It can be concluded safely from these tests and others with program material that the phase distortion of a 24dB/octave crossover is insignificant.

Often, claims are made for the superiority of low-order crossover networks with 6dB/octave slopes. It should be obvious from *Fig. 24* that a 6dB/octave acoustic response cannot be realized with a passive network because the driver itself introduces a 12dB/octave slope and the aforementioned associated phase shift. Merely applying a terminal voltage which changes with 6dB/octave would guarantee an 18dB/octave slope below the driver resonance and 6dB above it, but with excessive phase shift which defeats the whole phase argument for this type of network.

Even a 12dB/octave acoustic high-pass filter would be extremely difficult to achieve passively as can be seen from the required terminal voltage of *Fig. 24(c)*.

The lowest-order acoustic high-pass filter which can be realized with a passive network has 18dB/octave slope, sometimes called an acoustic Butterworth.[19] This filter still suffers from the phase quadrature between low and high-frequency driver outputs and the resulting frequency-dependent irregularity in the radiation pattern.[10] Surprisingly then, the 24dB/octave crossover is the lowest-order function for which the all-important radiation pattern has a stable axis. So-called "linear phase" loudspeakers are based on wishful thinking and not on physical realties.

PASSIVE CROSSOVERS

Not everyone is at home with the electronics and the rather elaborate op-amp circuits for this loudspeaker system. A passive crossover seems attractive as it would consist only of inductors, capacitors and resistors in a relatively simple interconnection. Unfortunately it is considerably more difficult for the home constructor to arrive at the correct element values for a passive network than to design active networks with their great flexibility to change transfer functions and gain.[19]

To design a passive network for a 24dB/octave acoustic crossover requires a computer optimization routine unless one is satisfied with the trial and error procedure on which most loudspeaker design has been based un-

See overleaf; text continued on page 30

THREE-ENCLOSURE LOUDSPEAKER DESIGN

Continued from page 24

til today. If a driver could be represented by a resistor then exact network values are easily calculated,[19] *Fig. 28(a)*. Real drivers have complex terminal impedances, *Fig. 18*. This not only affects the component values of the theoretical network but also the topology as can be seen by comparing the two networks of *Fig. 28*. Here a prototype design is shown for a 1.6kHz crossover between the Son-Audax tweeter and a 110mm woofer/midrange similar to the B110 in the plywood enclosure of *Fig. 4*. Even the computer-optimized network of *Fig. 28(b)* has the desired acoustic amplitude and phase characteristic only for about one octave either side of the crossover frequency. Additional electrical equalization is required to correct for the diffraction effects below 1kHz and to extend the low frequency response to 50Hz.

The active network in contrast to a passive one can be exact because the voltage source at the driver terminals is able to impose any desired acoustic frequency response on the driver, without interaction between the source's frequency response and the driver impedance. □

REFERENCES

10. Linkwitz S. H., Active crossover networks for non-coincident drivers, *JAES*, Vol. 24, Jan. 1976. p.2.

16. Linkwitz, S. J., Loudspeaker system design, *Wireless World*, Vol. 84, May 1978, p. 52 and June 1978, p. 67 and Issues 2 & 3, 1980, *Speaker Builder*.

17. Blinchikoff H. J., and Zverev A. I., Filtering in the time and frequency domains. Wiley, 1976.

18. Linkwitz, S. H., Shaped Toneburst Testing, *JAES*, Vol. 28, April 1980.

19. KEFTOPICS, International Edition, Vol. 1, No. 2A, 1976, and Vol. 3, No. 1 1978. KEF Electronics Ltd., Tovil, Maidstone ME156QP, Kent.

20. Linkwitz, S. H., Passive crossover networks for non-coincident drivers. *JAES*. Vol. 26, March 1978, p. 149.

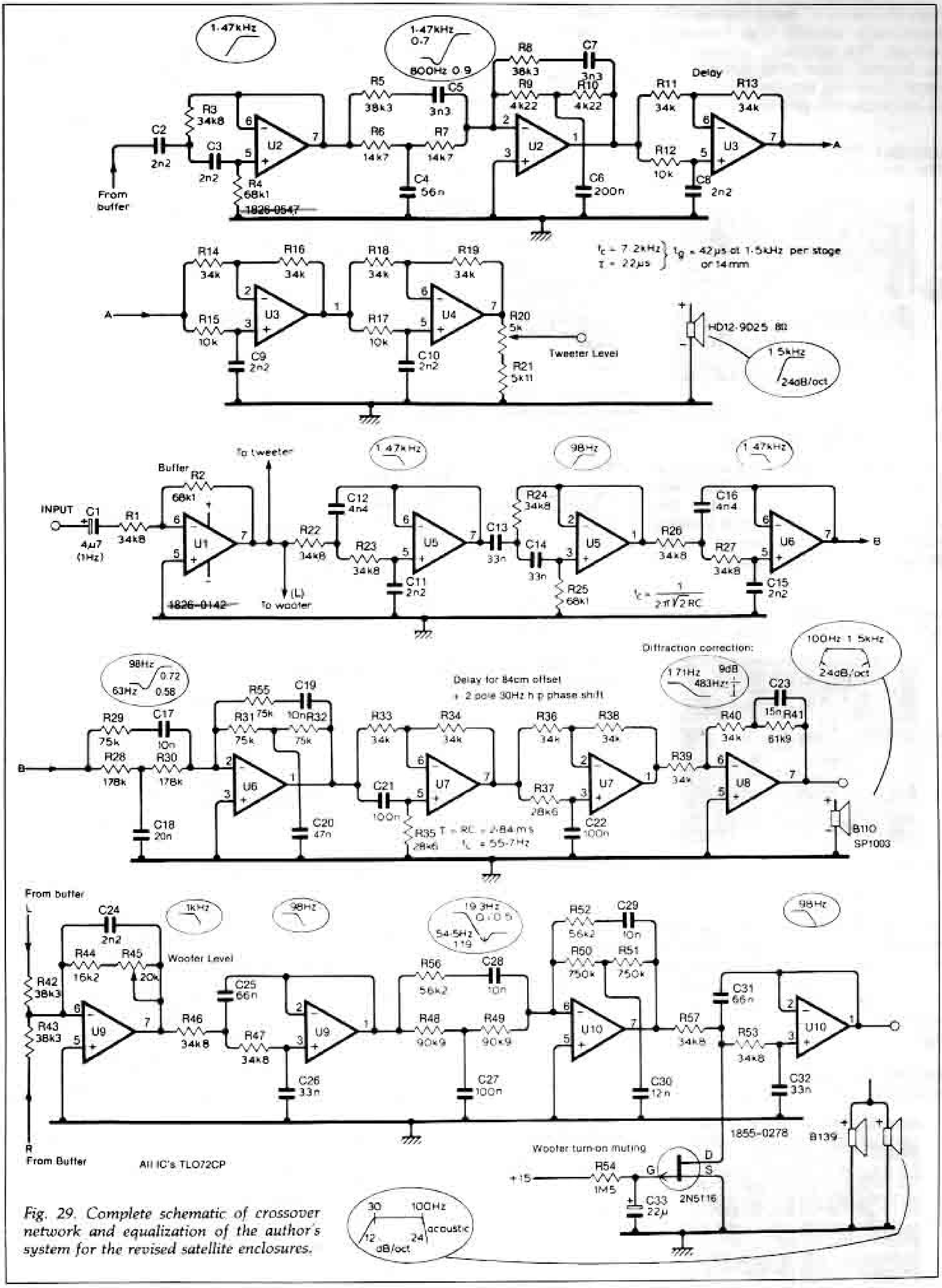

Fig. 29. Complete schematic of crossover network and equalization of the author's system for the revised satellite enclosures.