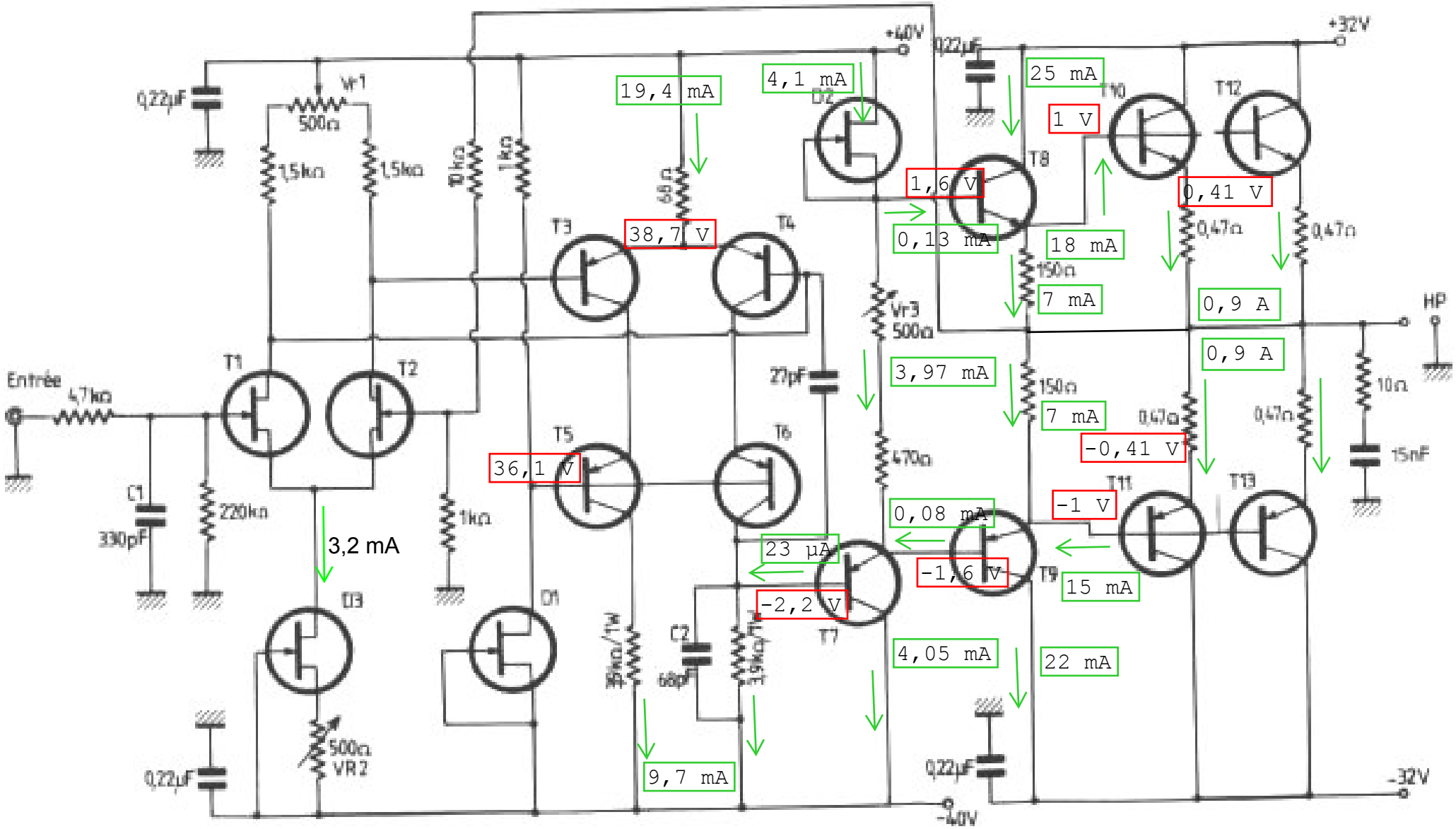PDF-XChange Viewer
Click to buy NOW!
www.docu-track.com