A High-Efficiency Receiver for a Horn-Type Loudspeaker of Large Power Capacity*

E. C. WENTE and A. L. THURAS

Bell Telephone Laboratories, Murray Hill, NJ

This paper describes a telephone receiver of the moving-coil type which is particularly adaptable to the horn type of loudspeaker and which represents a notable advance over similar devices at present available. Its design is such as to permit a continuous electrical input of 30 watts as contrasted with the largest capacity heretofore available of about 5 watts. In addition, measurements show that the receiver has a conversion efficiency from electrical to sound energy varying between 10 and 50 percent in the frequency range of 60–7500 Hz. Throughout most of this range, its efficiency is 50 percent or better. This contrasts with an average efficiency of about 1 percent for other loudspeakers either of the horn or cone type. Combining the 50-fold increase in efficiency with a 5- or 6-fold increase in power capacity, a single loudspeaker unit of the type here described is capable of 250–300 times the sound output of anything heretofore available.

This device is in commercial use in connection with the Vitaphone and Movietone types of talking motion pictures. As commercially produced in quantities numbering several thousand, an average efficiency of the order of 30 percent has been realized.

Guest Editor's Note

The loudspeaker described in this paper was a very important link in the chain of events leading to the commercial application of sound motion pictures and sound reinforcement. A. R. Soffel worked with the authors in the Bell Laboratories, and he has given us a coworker's impression.

Ferrante and Teicher mean piano music. Rogers and Hammerstein mean Broadway musicals. But Wente and Thuras mean loudspeakers. These latter gentlemen started us off on high-fidelity listening in the 1920s and 1930s at Bell Laboratories. First they developed the Western Electric 555 and 594 loudspeakers. They also developed a low-frequency driver with remarkable characteristics that unfortunately was never commercially exploited.

Wente and Thuras performed perfectly as a team. Each was tops in his particular field. We addressed the first as "Dr. Wente" and the second as "Al." Quiet, introspective Dr. Wente had the genius-scholar's concentration and attendant oblivion of his environment. He was distant and aloof. Everything he did was backed by solid physics and mathematics. His loudspeaker conceptions worked as well as he had calculated. Al was an extrovert in the manner of W. C. Fields . . . cigar and all. He was keenly aware of his surroundings. He expressed his opinions in no uncertain terms. He was hard and practical. He was a master of magnetic structure, diaphragm and voice-coil design. The resulting loudspeakers had both high quality and high efficiency. The results of their joint efforts were always giant steps forward.

Dr. Wente laid it down . . . Al carried it out.

John K. Hilliard

INTRODUCTION: Before the advent of radio broadcasting, practically the only loudspeakers in commercial use were of horn type. In recent years this type has been largely supplanted by others of more compact design. However, where appearance and size are not of prime importance, a loudspeaker with a horn still has a large field of service, as, for instance, in public-address equipment or in systems for reproducing speech and music in large auditoriums from wax or film records. For such uses the greater directivity obtained by the use of a horn has in some respects definite advantages. In the design of the receiver about to be described we have had in view particularly the requirements for such services, where the following qualifications were deemed of the greatest importance: a good response-frequency characteristic up

to at least 5,000 p.p.s., large power output without amplitude distortion, high efficiency, and constancy of performance.

As this paper is concerned with the design of a driving unit, or the receiver proper, and not with the horn, we shall confine our discussion to the operation of the receiver when connected to a tube of infinite length and of the same cross-sectional area as the throat of the horn. An ideal horn should have at its throat the same acoustic impedance[1] as a tube of this character, viz., $\rho c/A$ CGS units, where ρ is the density of air, c the velocity of sound, and A the area [1].

THE COUPLING AIR CHAMBER AND DIAPHRAGM

In order effectively to make use of horns as sound intensifiers it is usually necessary to couple the throat of the horn to the diaphragm through an air chamber. We shall first consider the effect of this air chamber on the sound output of the loudspeaker. This coupling air chamber is generally of an indefinite conical shape of the type shown in Fig. 1. If we assume that this air chamber is so proportioned that the annular area $2\pi rt$ is equal to the throat area, and that the diaphragm is driven so that its displacement is paraboloidal, then, as calculated from formulas developed in Appendix I, the mechanical impedance imposed by the air chamber and horn on the diaphragm is shown in the curves of Fig. 2. Here the ordinates of the curves r_1 and x_1 are proportional to the resistance and reactance, respectively, and the abscissae are equal to the product of the frequency and the radius of the diaphragm. Of particular interest here is the large decrease in the resistance with frequency, for r_1, multiplied by the square of the velocity of the diaphragm, is the acoustic power delivered to the horn. For example, if the radius of the diaphragm were 4 cm, no sound would be emitted at 4000 p.p.s. We have here one reason why most horn-type loudspeakers fail to reproduce high-frequency tones at sufficient intensity. Of course, in most cases the high-frequency tones are further attenuated by the fact that the mode of motion of the diaphragm changes with frequency. The decrease in resistance with frequency is largely due to the fact that the disturbances generated at different points of the dipahragm do not reach the throat of the horn in the same phase. To minimize this effect the air chamber should be designed so as to make this phase difference as small as possible. In the same figure, r_2 and x_2 show the resistance and reactance, respectively, if the diaphragm were moved as a plunger, i.e., with the same amplitude and phase over its whole surface. It is seen that the resistance is considerably larger and the cut-off frequency nearly twice as high. These curves show the superiority of the plunger type of diaphragm.

In order to cover the desired frequency range, the method of coupling a diaphragm to the horn shown in Fig. 3 was adopted. Here the disturbances reach the horn more nearly in phase without having to pass through any restricted passages. The throat of the horn is flared annularly to the point A. The disturbances reach the throat of the horn from the inner and outer portions of the diaphragm approximately in phase up to comparatively high frequencies. With this type of construction it is possible to use a fairly large diaphragm so that large amounts of power may be delivered without a great sacrifice in efficiency at either the high or the low frequencies. An experimental test showed that with this type of coupling for a particular size of diaphragm and throat area the cut-off frequency was raised from approximately 3500 to 6000 Hz.

The diaphragm was made of a single piece of aluminum alloy 0.002 inch (0.05 mm) thick; metal was used in preference to other materials because of its superior mechanical properties. The form and principal dimensions are shown in Fig. 3. A driving coil is attached directly to the diaphragm near its outer edge. With this arrangement the diaphragm can be driven nearly as a plunger, and it has little tendency to oscillate about a diametral axis, as there is great rigidity against a radial displacement of any part of the coil. The portion of the diaphragm lying between the coil and the clamping surfaces has tangential corrugations of the same type as described by Maxfield and Harrison [2] in reference to a phonograph sound box. The inner portion of the diaphragm was drawn into the form of two reentrant segments of spherical shells; this part was thereby made very rigid so that it should move as a unit up to high frequencies.

[1] The term acoustic impedance as here used may be defined as the ratio of pressure to rate of volume displacement.

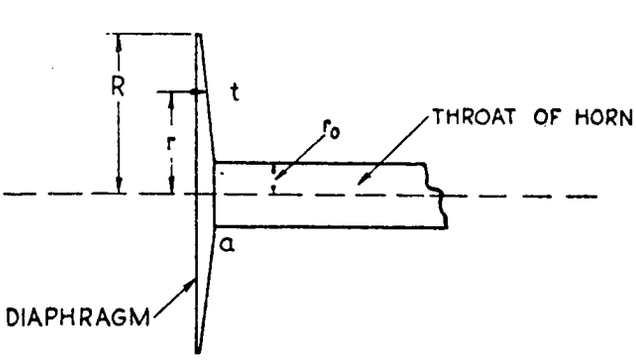

Fig. 1. Conventional type of coupling air chamber.

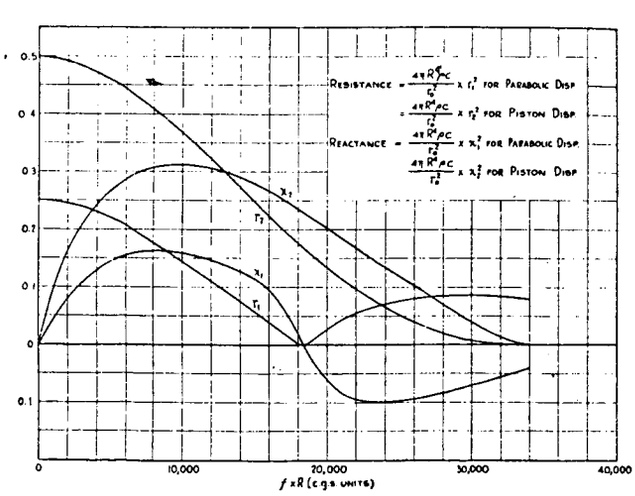

Fig. 2. Mechanical impedance of air chamber and ideal horn.

CONSTRUCTION OF THE DRIVING COIL

For the driving element of loudspeakers either a moving-coil or a moving armature is commonly used. The latter is in general satisfactory if driven at a small amplitude. However, where large powers are involved, the moving-coil drive can be much more simply constructed so that it is free from amplitude distortion; it has the further advantage of having a resistance nearly constant with frequency and a practically negligible reactance. These were the primary reasons for our choosing this type of drive.

The coil that was used in the receiver consisted of a single layer of aluminum ribbon 0.015 inch (0.38 mm) wide and 0.002 inch (0.05 mm) thick wound on edge as shown in Fig. 4. The turns were held together with a film of insulating lacquer about 0.0002 inch (0.0005) thick, thoroughly baked after the winding was completed. This type of coil has the following advantages. It is self-supporting, no spool being required; 90 percent of the volume of the coil is occupied by metal; the distributed capacity between turns is small, giving a coil whose impedance varies only slightly with frequency; the metal is continuous between the cylindrical surfaces, allowing heat to be conducted rapidly outward from the center of the winding and diminishing the possibility of any warping of the coil; it can be accurately made to dimensions, thus permitting small clearances between the coil and the pole pieces. Small clearances not only permit the use of a comparatively small magnet, but they facilitate the dissipation of heat. This latter effect is shown in the curves of Fig. 5. These curves give the termperature of the coil as a function of the power input for the coil in open air (A), and when it is placed between annular pole pieces with clearances of 0.010 inch between the cylindrical surfaces (B).

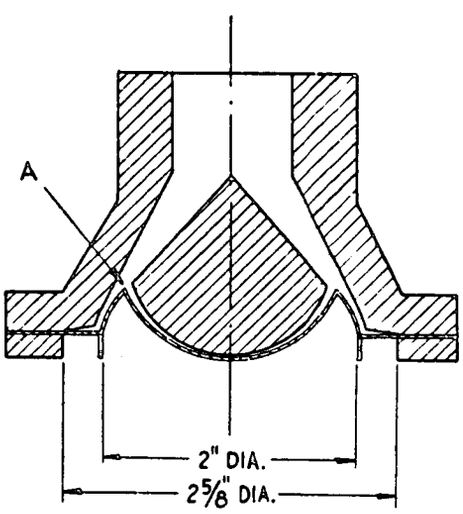

Fig. 3. Diaphragm and air chamber.

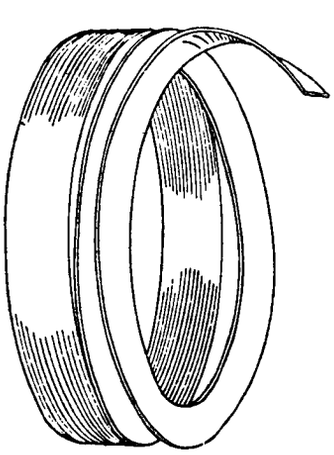

Fig. 4. Receiver driving coil.

THE ELECTROMAGNET

As shown in Fig. 6, the electromagnet is of conventional design except that the central pole piece has an opening through its center to avoid a reaction of any air pockets on the diaphragm. This opening is widely flared to prevent tube resonance.

EXPERIMENTAL RESULTS

It has already been pointed out that an ideal horn should have an acoustic impedance at its throat equal to that of a tube of infinite length and of the same cross-sectional area. In order to measure the efficiency that the receiver would have under this condition, by any method whatever, it is

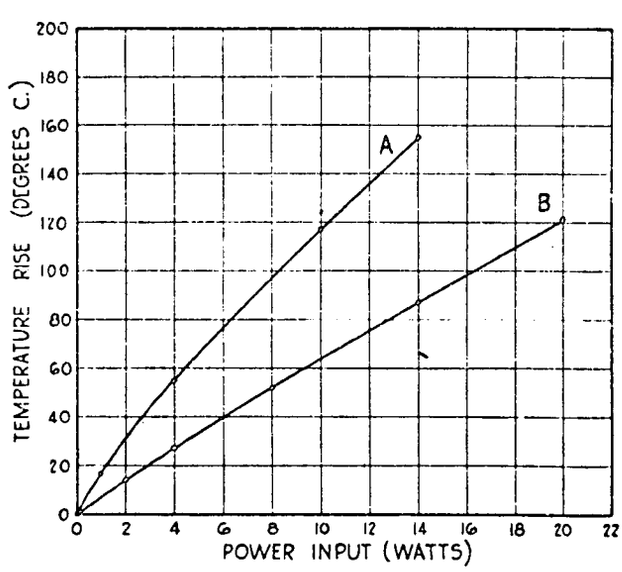

Fig. 5. Variation of temperature of coil with direct current input.

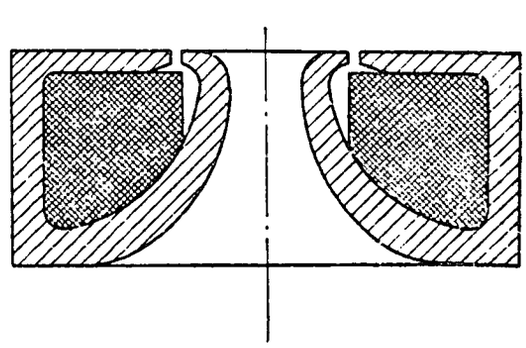

Fig. 6. Field magnet.

necessary to connect the receiver to a tube having the same acoustic impedance as a tube of this character. This impedance for a tube 2.45 cm in area is 16.7 CGS units. A tube of finite length but of the same area will have an impedance of this value provided the sound wave reflected at the far end has a relatively small amplitude when it reaches the sending end. To satisfy this condition a tube 50 feet (15 m) long was terminated in an acoustic resistance unit having an impedance approximately equal to $16.7 + j16\omega \times 10^{-4}$ CGS units. The essential elements of this resistance unit comprised a number of short narrow annular slits; its impedance was determined experimentally by a method described in another paper [3]. As this impedance at low frequencies is practically the same as the characteristic impedance of the tube, the amplitude of the reflected wave in this region is small; at the higher frequencies the reflected wave is attenuated sufficiently in the 50-foot (15-m) tube to produce a negligible effect on the sending end impedance. This tube with the resistance unit was connected to the receiver during the following series of measurements.

EFFICIENCY

One of the simplest methods of determining the power efficiency of a loudspeaker is to measure the electrical impedance, first when the receiver is in operating condition, and secondly when the diaphragm is constrained from moving so that no back EMF is generated. The difference between these impedances is known as the motional impedance [4]. The resistance component of this motional impedance when multiplied by the square of the current gives the power that is generated by the motion of the diaphragm. If there is a negligible amount of power lost in viscosity and mechanical hysteresis, the ratio of the motional impedance to the free impedance can be taken as the efficiency of the receiver, i.e., the ratio of the acoustic power output to the total power input. This method of measuring efficiency is well known to the art, but for most commercial receivers the efficiency is so low that the motional impedance cannot be determined with a high degree of accuracy over an extended frequency range. However, for this receiver we have had no difficulty in determining the efficiency in this way up to 8000 p.p.s. The values so obtained are given by the circles in Fig. 7.

On account of the uncertainty of the magnitude of the mechanical power losses within the receiver it was deemed desirable to measure the efficiency more directly, viz., to measure the actual sound power generated for a given power input.

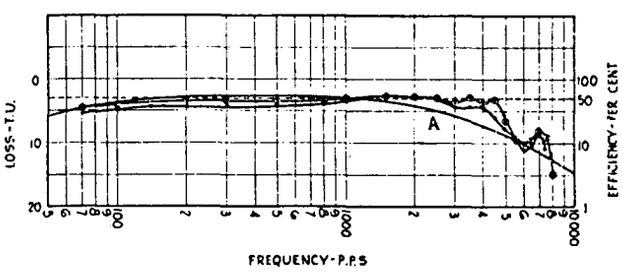

Fig. 7. Efficiency of the receiver.

The power output may be determined directly by measuring the acoustic pressure in the tube at the sending end. In order to measure this pressure, an annular slit was provided on the side of the tube a few inches from the receiver, as shown in Fig. 8. This annular slit had a diameter of a quarter of an inch (25 mm), a width of 0.003 inch (0.076 mm), and a length of 0.040 inch (0.1 mm). A slit of these dimensions has an acoustic impedance about fifteen times as great as the tube, so that it has a negligible effect on the sound wave propagated along the tube. This slit led to a small chamber over the face of the diaphragm of a condenser transmitter. The condenser transmitter was connected to an amplifier and an ac ammeter. This combination was previously calibrated, so that from the meter readings the pressure over the slit could be determined.

The input power was determined from the current input and the resistance of the receiver. With this setup we thus were able to measure both the acoustic power transmitted along the tube which is equal to $(\text{pressure})^2/16.7$ erg per second, and the power input. The operating efficiency is the ratio of these two quantities. The dots plotted in Fig. 7 give the values of the efficiencies so obtained. These values are seen to agree closely with those calculated from the motional impedance. This agreement shows that the mechanical power losses in the receiver are small.

Curve A in Fig. 7 gives the efficiency as calculated from the constants of the receiver by means of the formula given in Appendix II under the assumption that the mechanical impedance imposed on the diaphragm and the air chamber has the same value throughout the whole frequency range, viz., $16.7A^2$ CGS units, where A is the effective area of the diaphragm. It is seen that the calculated and measured values are in good agreement except for certain irregularities at the higher frequencies. Whether these irregularities are to be ascribed to the action of the air chamber or to a change in the mode of motion of the diaphragm we are not at present prepared to say.

The curves of Fig. 7 give an efficiency for this receiver of about 50 percent over a wide frequency range. This efficiency is within 3 T.U. of the possible maximum of 100 percent. We may remark at this point that it is conceivably possible to build a receiver which will sound louder than one having an efficiency of 100 percent. If, for instance, a receiver introduces harmonics on account of amplitude distortion, a low-frequency driving force may give rise to a tone of higher frequency, where the ear may have a sensitivity many times greater than at the driving frequency. An increase in loudness obtained in this way of course exacts a sacrifice in the faithfulness of reproduction. The difference in loudness between the sound emitted

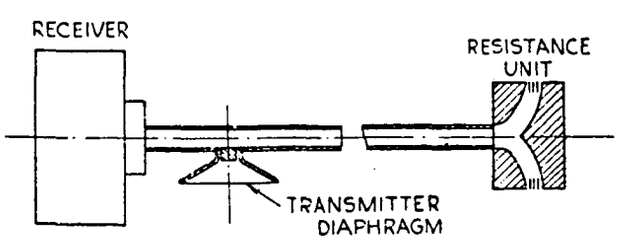

Fig. 8. Arrangement of apparatus for measuring efficiency.

by this receiver and by ordinary commercial types of loudspeakers, for the same power input, is considerable, since most of them have an efficiency of less than 1 percent for speech frequencies. Not only does this receiver have a high efficiency over a wide frequency range, but it is free from any sharp variations in efficiency with frequency, a condition of great importance in the quality of reproduction.

AMPLITUDE DISTORTION

Thus far we have discussed only the frequency characteristic of the receiver. There still remains to be considered the proportion of harmonics that are generated by the receiver when supplied with a current sine waveform. These harmonics are generated when the displacement of the diaphragm is not proportional to the input current. At low frequencies the amplitude of motion for a given power output is comparatively large and the diaphragm for large powers will be driven beyond the point where Hookes' law holds. At the higher frequencies no trouble is to be expected from this source. With the aid of an electrical filter we have therefore made measurements on the harmonic content in the sound output when the receiver was supplied with a 60-Hz sine-wave current. The values so obtained as a function of the power input are plotted in Fig. 9, where curve A is the output power of the fundamental tone and B that of the higher harmonics. These curves show that even at 60 Hz an output power of 0.5 watt may be obtained without the introduction of higher harmonics to an amount greater than 1.0 percent. The total power in the harmonics would in this case be 20 T.U. below that in the fundamental tone. If a horn were connected to the receiver in place of the tube, in addition to the resistance, a mass reactance would generally be imposed on the diaphragm at the lower frequencies. Under these conditions the proportion of harmonics introduced would be still lower than that indicated in Fig. 9.

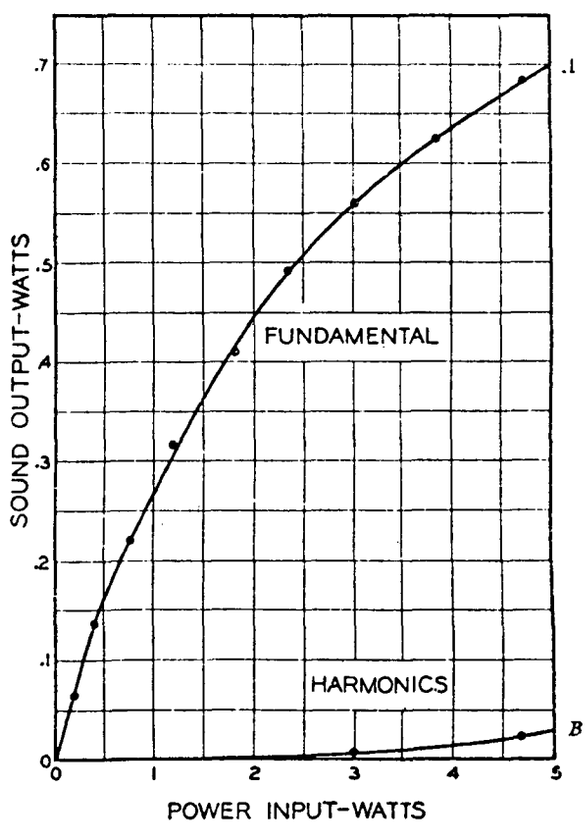

Fig. 9. Power output at 60 p.p.s.

At the higher frequencies the power output is limited solely by the current-carrying capacity of the coil. At these frequencies the steady power input for a temperature rise of 100°C. is about 30 watts. With an efficiency of 50 percent the corresponding output would be 15 watts.

After the work described in this paper was for the most part done and as a result of the extremely promising performance of the first models, a design of the receiver built along essentially these lines was worked into a form suitable for commercial production by Mr. W. C. Jones and Mr. L. W. Giles. These receivers are now in commercial use in Vitaphone and Movietone installations. As commercially produced in quantities numbering several thousand, efficiencies of the order of 30 percent have been realized.

In conclusion we wish to express our appreciation for the valuable assistance given by Mr. T. F. Osmer in carrying out most of the experimental work described in this paper.

APPENDIX I

Consider a diaphragm and connecting air chamber of the form shown in Fig. 1. Assume that the air chamber is of a form such that the cross-sectional area at any distance r from the center is equal to the throat area of the horn, i.e., $2\pi rt = \pi r_0^2$. This form of connecting air chamber then differs but little from that used in most commercial types of horn loudspeakers. The sound output is in general dependent on the mode of motion of the diaphragm. In most loudspeakers this mode of motion varies with the frequency. However, let us assume that we have a paraboloidal displacement at all frequencies. The velocity at any radial distance may then be represented by

$$\zeta = \zeta_0\left[1 - \left(\frac{r}{R}\right)^2\right]e^{i\omega t}$$

if $\zeta_0 e^{i\omega t}$ is the velocity at the center.

Under the assumed conditions, the sound transmitted through the throat is very nearly the same as that which would be transmitted along the positive direction through the tube sketched in Fig. 10, which extends to infinity in both directions, provided the portion of the wall of the tube from a' to 0 and from a to 0 had a radial velocity

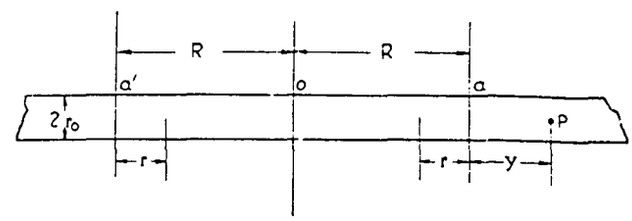

Fig. 10.

equal to

$$\frac{2\pi r}{2\pi r_0} \cdot \zeta_0\left[1 - \frac{r^2}{R^2}\right]e^{i\omega t} .$$

The velocity potential at a point P at a distance y from a, if r_0 is small compared with the wavelength of sound, is then

$$\varphi_y = -i\left[\int_0^R \frac{\left[1 - \frac{r^2}{R^2}\right]r}{r_0^2 k} e^{ik(ct-y-r)} dr + \int_0^R \frac{\left[1 - \frac{r^2}{R^2}\right]r}{r_0^2 k} e^{ik(ct-y-2R+r)} dr\right]\zeta_0$$

where c is the velocity of sound and

$$k = \frac{\omega}{c}$$

or

$$\varphi_y = A\frac{2\zeta_0 e^{ik(ct-y-R)}}{-ir_0^2 k^3}$$

where

$$A \equiv \left(1 + \frac{6}{k^2R^2}\right)\cos kR + \left(2 - \frac{6}{k^2R^2}\right) .$$

If we take the real part of

$$\rho\frac{d\varphi_y}{dt}$$

we get the instantaneous pressure at the point P where ρ is the density of the air. This gives

$$p_y = \frac{-2\zeta_0\rho c}{r_0^2k^2} \cdot A \cos k(ct - y - R) .$$

If we substitute r for $-y$, this expression gives the instantaneous pressure on the diaphragm at the radial distance r from the center. The instantaneous power delivered by the diaphragm is then

$$W = -\frac{2\rho c A}{r_0^2k^2}\zeta_0 \cos kct \cdot 2\pi \int_0^R \left(1 - \frac{r^2}{R^2}\right)\cos k(ct + r - R)r\, dr$$

$$= \frac{4\pi A\rho c}{r_0^2k^4}\zeta_0^2[A \cos kct + B \sin kct]\cos kct$$

where

$$B \equiv \left(1 + \frac{6}{k^2R^2}\right)\sin kR - \frac{6}{kR} .$$

The effective force on the diaphragm is then

$$F = \frac{W}{\zeta_0 \cos kct} = \frac{4\pi A\rho c\zeta_0}{r_0^2k^4}[A \cos kct + B \sin kct] .$$

The effective resistance is therefore

$$\frac{4\pi A^2\rho c}{r_0^2k^4}$$

and the effective reactance

$$-\frac{4\pi\rho c A B}{r_0^2k^4} .$$

Expressions for the resistance and reactance for other modes of motion of the diaphragm may be obtained in a similar manner.

APPENDIX II

The motional resistance R_m of a moving-coil receiver is equal to

$$\frac{B^2l^2(r + r')}{(r + r')^2 + \left(m\omega - \frac{S}{\omega} + x\right)^2} \quad \text{ohms [4]}$$

where B is the average flux density, l the length of wire in the receiving coil, $r + jx$ the mechanical impedance imposed on the diaphragm by the horn through the coupling air chamber, and $r' + j(m\omega - S/\omega)$ is the mechanical impedance of the diaphragm aside from that imposed by the horn.

If r' is negligible, the efficiency of the receiver, i.e., the ratio of power output to power input, is

$$\eta = \frac{R_m}{R_m + R_d}$$

where R_d is the resistance of the coil when its motion in the field is completely damped.

REFERENCES

[1] C. R. Hanna and J. Slepian, "The Function and Design of Horns," *J. AIEE* (Mar. 1924).

[2] Maxfield and Harrison, *Bell. Sys. Tech. J.*, vol. 5, pp. 493–523 (July 1926).

[3] Wente and Bedell, *Bell Sys. Tech. J.* (Jan. 1928).

[4] Kennelley and Pierce, "The Impedance of Telephone Receivers as Affected by the Motion of Their Diaphragms," *Proc. AAAS*, vol. 48, (Sept. 1912).